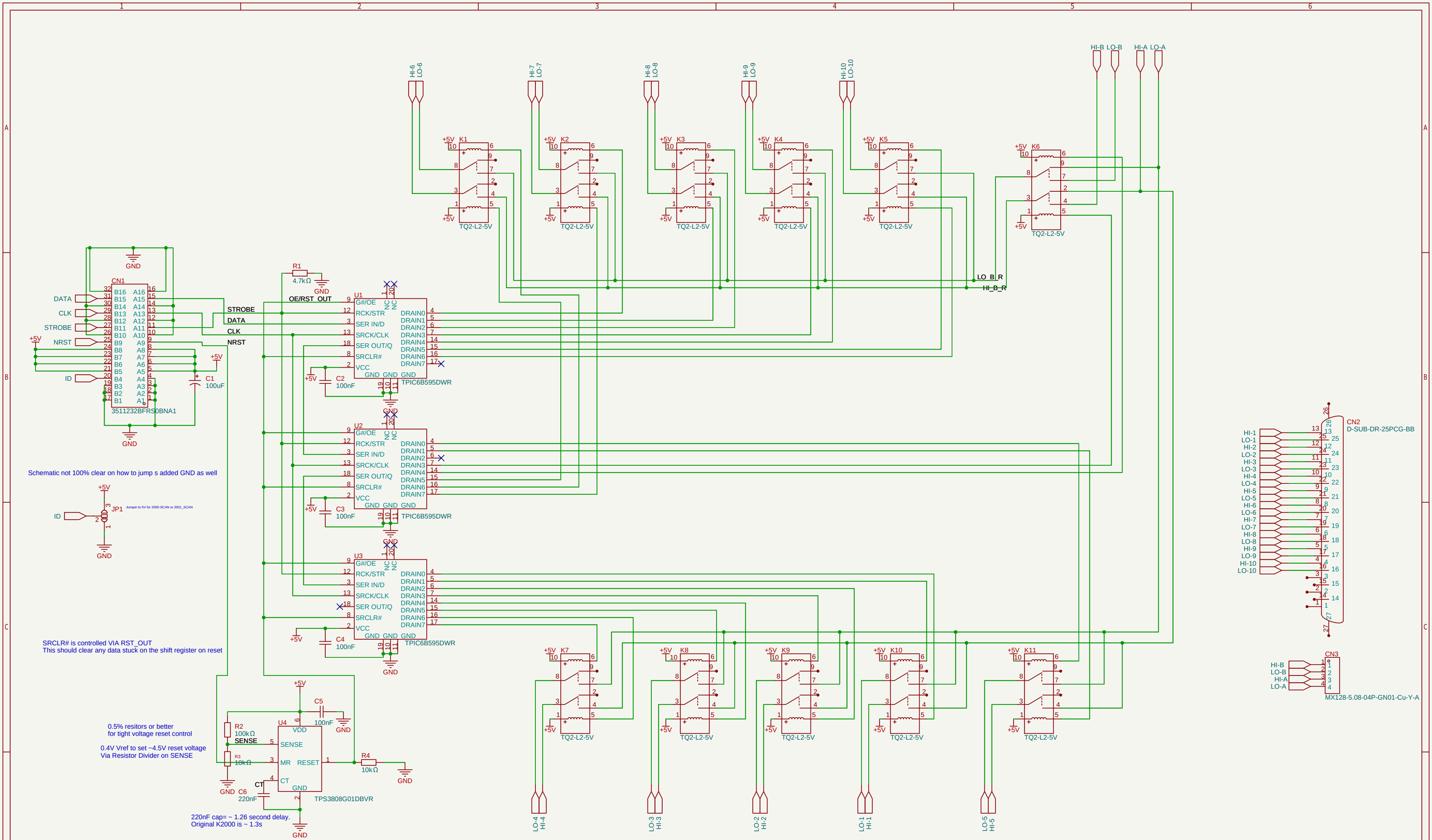

Schematic	Keithley 2000 SCAN Panasonic DB25 V1.0	Create at	2026-03-20
		Update at	2026-03-21
Board	Keithley 2000 SCAN Panasonic DB25 V1.0	Page	Main
Drawn		SCAN2000	
Reviewed			
		Version	Size	Page 1 Total 1
EasyEDA		V1.0	A4	EasyEDA.com